Push-Fit 87.5° T (TS) Grey

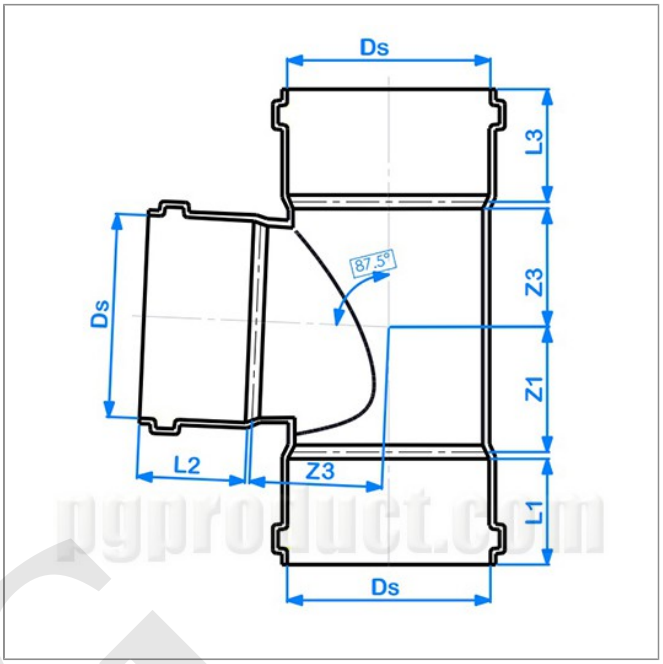

Standard :EN 1329-1

Code No .	Thickness (mm)	Nominal Outside Diameter (mm)	Application Area Code	Ds	L1	L2	L3	Z1	Z2	Z3
PG 1364 F	3	75	BD	75.4	62	55	55	41	45	45
PG 1366 F	3.2	110	BD	110.45	75	68	68	60	74	74
PG 1367 F	3.2	125	BD	125.5	82	72	72	72	78	73